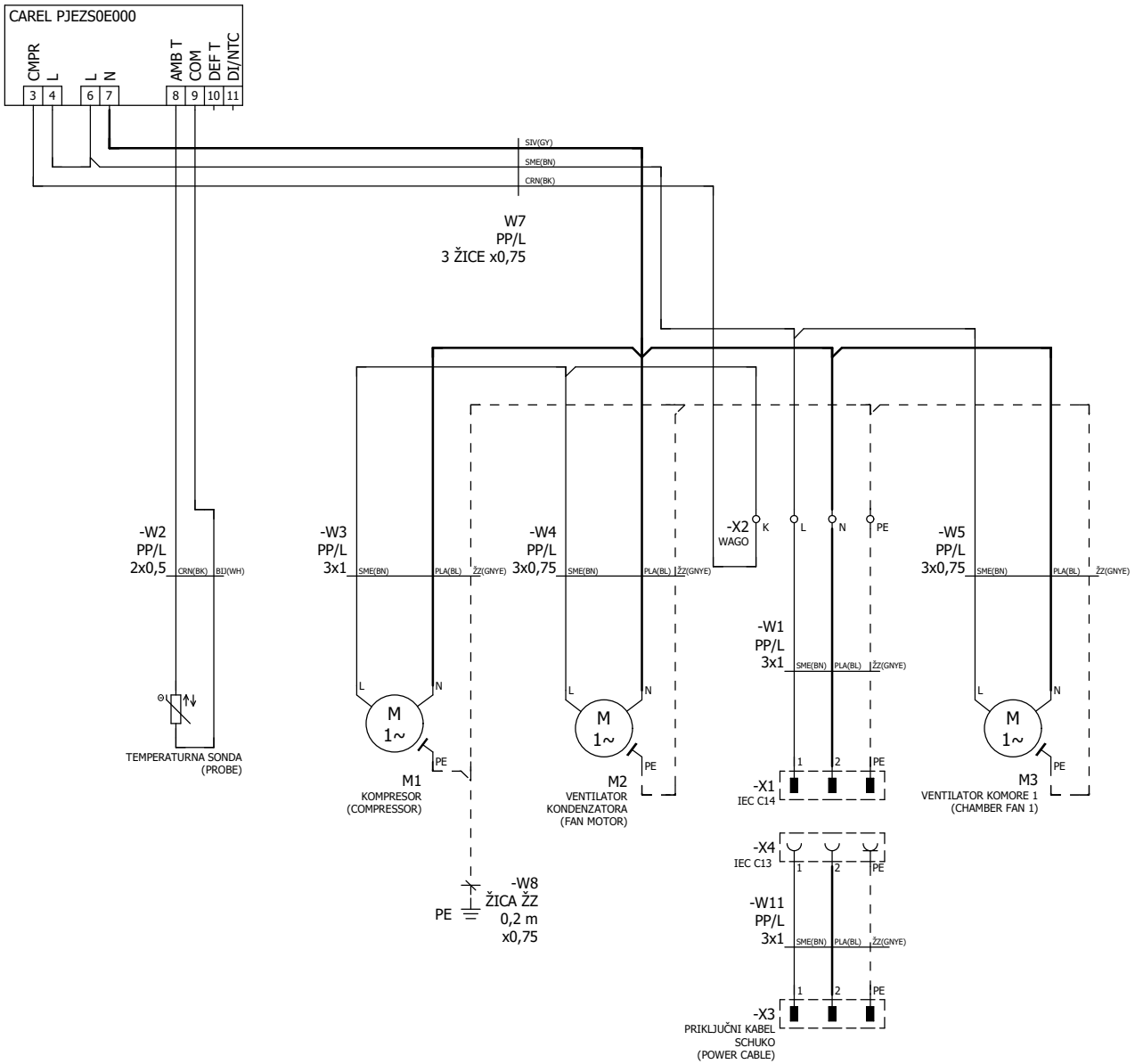

Code	Type	Project		Status	=
716101	OPREMA INTERCOM d.o.o. Gospodarska 3, 42202 Trnovec	CU 3/8 V BERG VERTIKALNI		Date Changed by NPETEK	+ Page 1